Product Technical File

This product technical file applies to the following products:

Product code	Description
45.0125.W	125ml straight sided jar – 70mm neck - white
45.0250.W	250ml straight sided jar – 70mm neck - white

Document prepared by: *(name, role)*	J Davies, Quality Associate
Sign:	
Document reviewed by: *(name, role)*	Nicholas Parkin, Quality Manager (Group)
Sign:	Nicholas Parkin ⌦Nov ⌦9, ⌦⌦⌦⌦ ⌦4:⌦7 GMT⌦
Issued: *(Date)*	29 Nov 2021

Table of Contents

Product Summary

45.0125.W & 45.0250.W are 125ml and 250ml white HDPE straight sided jars designed to be compatible with a 45.0000.W closure, lined with an IHS 'Lift n Peel' liner.

All materials comply with EU directive 10/2011 as amended.

Shelf Life Data

No formal shelf life has been applied to the jars. The testing that is typically performed is specifically related to dimensional conformance to the drawing specification and repeatability of the manufacturing processes. None of these evaluations are designed for, nor intended to predict an expiration date.

It is recommended that the products are stored in the original packaging, properly palletised and the pallets should be single stacked for optimum protection. An arbitrary pre- fill shelf life of 2 years from date of manufacture has been applied for stock management purposes.
Post filling shelf life is the responsibility of the customer based on their application.

Specification(s)

Material type	98%	HDPE Chevron Phillips HHM 5502BN
	2%	White MB B8750
Total weight	125ml	16.10 -0.9g / +1.5g
	250ml	22.1 -0.9g / +1.5g
Jars per case	125ml	210 (double bag insert)
	250ml	140 (double bag insert)
Boxes per layer	125ml	4
	250ml	4
Layers per pallet	125ml	3
	250ml	3
Pallet size	125ml	800mm x 1200mm x 1150mm
	250ml	800mm x 1200mm x 1150mm
Jars per pallet	125ml	2,520
	250ml	1,680

Technical Drawing(s)

125ml Jar

THIS IS AN UNCONTROLLED DOCUMENT

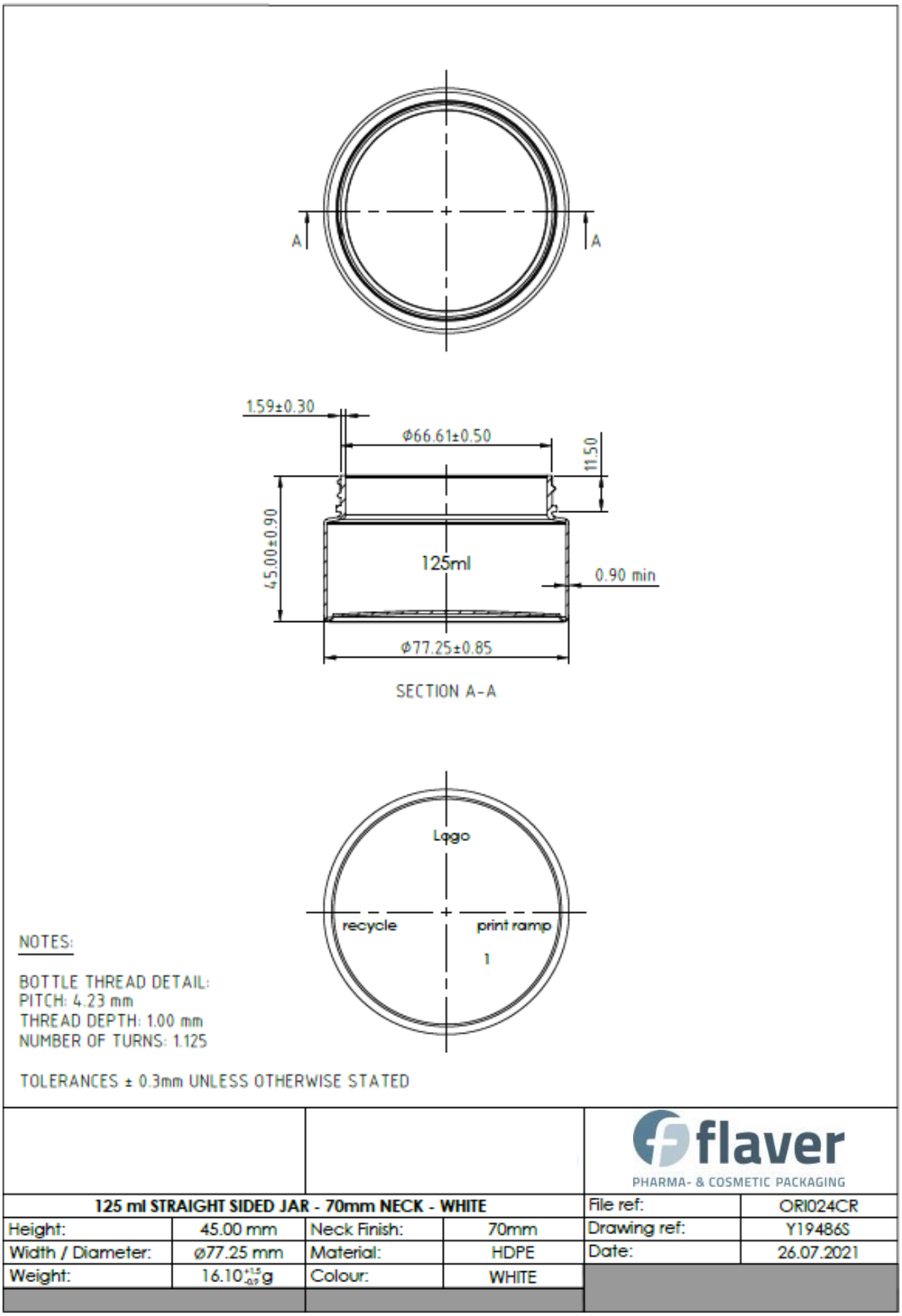

250ml Jar

THIS IS AN UNCONTROLLED DOCUMENT

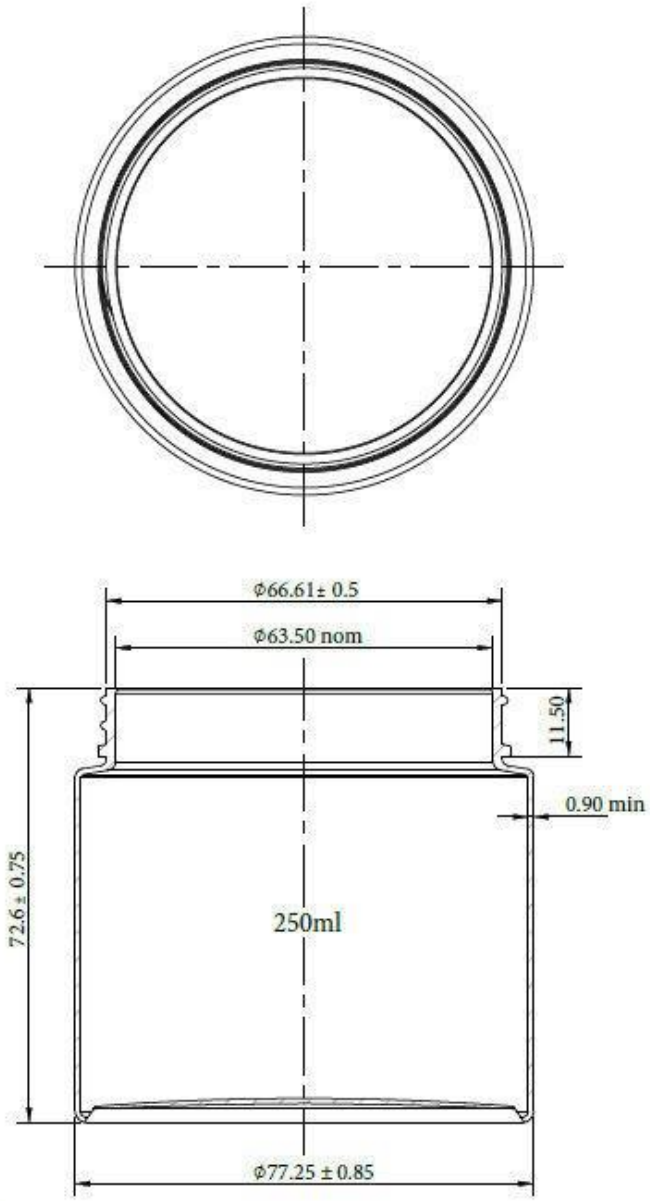

BOTTLE THREAD DETAIL:
PITCH: 4.23 mm
THREAD DEPTH: 1.00 mm
NUMBER OF TURNS: 1:125
NECK AND THREAD DETAILS THE SAME ON BOTH JARS

flaver
PHARMA- & COSMETIC PACKAGING

250ml straight sided jar – 70mm neck – white				File ref:	DOR1025CR v3
Height:	72.6 mm	Material:	HDPE	Drawing ref:	Y19208S v3
Width / Diameter:	ø77.25 mm	Colour:	White	Date:	28.09.2020
Weight:	22.1 -0.9+1.5g				
Tolerance:	See Above				

Raw Material Specification(s)

For more information and technical assistance contact:

Chevron Phillips Chemical Company LP
P.O. Box 4910
The Woodlands, TX 77387-4910
800.231.1212

MARLEX® POLYETHYLENE

PREMIUM EXTRUSION AND RIGID PACKAGING RESINS

Marlex® HHM 5502BN Polyethylene

HIGH DENSITY POLYETHYLENE (HDPE)

This high molecular weight, ethylene-hexene copolymer is tailored for lightweight blow molded containers that require:

- Excellent stiffness
- Exceptional processability
- Durability
- Recyclability

This resin meets these specifications:

- ASTM D4976 - PE 235
- FDA 21 CFR 177.1520(c) 3.2a, use conditions B through H per Table 2 off 21 CFR 176.170(c)
- Listed in the Drug Master File

Typical blow molded applications for HHM 5502BN include:

- Ice chests and coolers
- Household and industrial chemical containers
- Food packaging
- Pharmaceuticals

NOMINAL PHYSICAL PROPERTIES[1]	English	SI	Method
Density	---	0.955 g/cm^3	ASTM D1505
Flow Rate (MI, 190 °C/2.16 kg)	---	0. 35 g/10 min	ASTM D1238
Tensile Strength at Yield, 2 in/min, Type IV bar	4,000 psi	27 MPa	ASTM D638
Elongation at Break, 2 in/min, Type IV bar	600 %	600 %	ASTM D638
Flexural Modulus, Tangent - 16:1 span:depth, 0.5 in/min	200,000 psi	1,370 MPa	ASTM D790
ESCR, Condition B (100 % Igepal), F_{50}	24 h	24 h	ASTM D1693
Brittleness Temperature, Type A, Type I specimen	< -103 °F	< -75 °C	ASTM D746

1. The nominal properties reported herein are typical of the product, but do not reflect normal testing variance and therefore should not be used for specification purposes. Values are rounded. The physical properties were determined on compression molded specimens that were prepared in accordance with Procedure C of ASTM D4703, Annex A1.

Revision Date: January, 2019

Another quality product from Chevron Phillips Chemical Company LP The Woodlands, Texas

Another quality product from Chevron Phillips Chemical Company LP The Woodlands, Texas

Single Bounce ATR

Marlex® HHM 5502BN HDPE
6111202

Number of sample scans: 128
Number of background scans: 128
Resolution: 4.000
Sample gain: 4.0
Mirror velocity: 0.6329
Aperture: 100.00
Detector: DTGS KBr
Beamsplitter: KBr
Source: IR

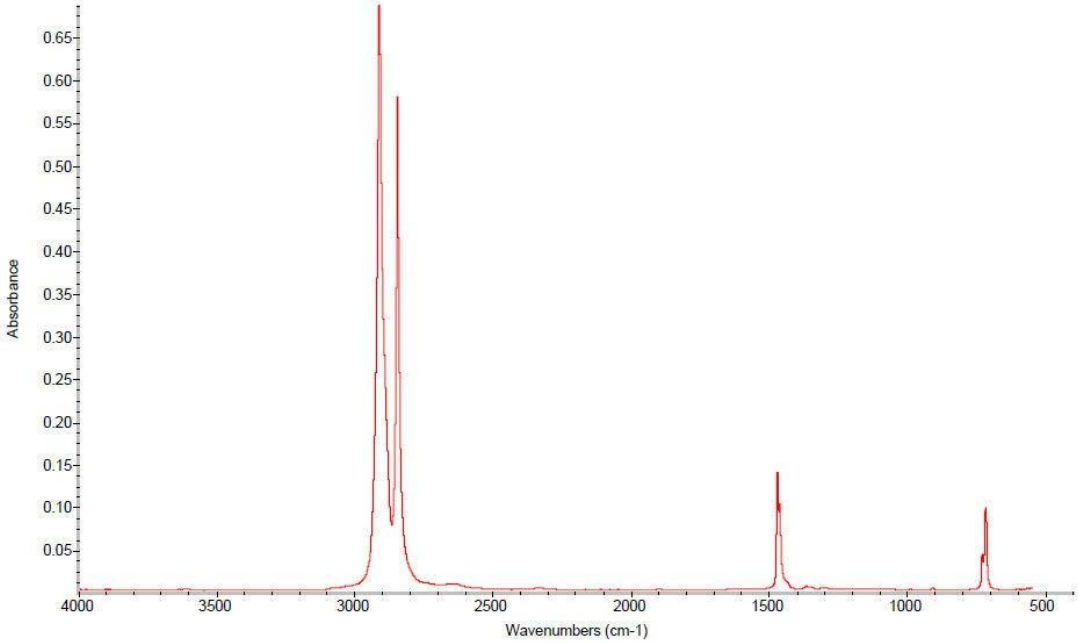

Technical Disclaimer - Any technical advice, recommendations, results, or analysis ("Information") contained herein, including, without limitation, Information as it may relate to the selection of a specific product ("Product") for your use and application, is given **without warranty or guarantee** and is accepted at your sole risk. It is imperative that you test the Information (and Product, if applicable) to determine to your own satisfaction whether the Information (and Product, if applicable) is suitable for your intended use and application. **You expressly assume, and release Chevron Phillips Chemical Company from, all risk and liability, whether based in contract, tort or otherwise, in connection with the use of, or results obtained from, such Information (and Product, if applicable).** Further, Information contained herein is given without reference to any intellectual property issues, as well as federal, state or local laws which may be encountered in the use thereof.

Compliance Statement(s)

BSE/TSE declaration & Regulatory Overview

Product Regulatory Overview (PRO)
Marlex® HHM 5502BN High Density Polyethylene

Product Manufacturer
Chevron Phillips Chemical Company LP
Saudi Polymers Company (SPCo)

Chemical Inventories
All the components of this product are listed on
AUSTRALIA: Australian Inventory of Chemical Substances (AICS)
CANADA: Domestic Substances List (DSL)
PEOPLE'S REPUBLIC OF CHINA: Inventory of Existing Chemical Substances (IECSC)
EUROPEAN UNION: All necessary components have been registered according to Regulation (EU) No. 1907/2006 (REACH)
SWITZERLAND: Exemptions from the obligation to notify/register
JAPAN: Existing & New Chemical Substances (ENCS) Inventory
KOREA: Existing Chemicals List (ECL)
NEW ZEALAND: Inventory of Chemical Substances (NZIoC)
PHILIPPINES: Philippine Inventory of Chemicals and Chemical Substances (PICCS)
TAIWAN: Taiwan Chemical Substance Inventory (TCSI)
UNITED STATES: Toxic Substances Control Act (TSCA) Chemical Inventory

Food Contact

It is the responsibility of the packaging converter or food packager to verify that the finished article meets both the technical and regulatory requirements of the intended application.

European Union (EU) Food Contact
The monomer(s) and the additive(s) of this resin are listed in Commission Regulation (EU) No 10/2011 on plastic materials and articles intended to come into contact with food and all its Amendments including Commission Regulation (EU) 2019/37.

This product was tested for the overall and specific migration compliance per Commission Regulation (EU) No 10/2011. The tested sample thickness was 3.175 mm (125 mils). The surface-to-volume ratio was 1 dm^2 sample immersed in 1dl simulant. For measuring the overall migration level, this product was tested with 3% acetic acid for 10 days at 40°C, with 50% ethanol for 10 days at 40°C, and with olive oil for 10 days at 40°C. For measuring the specific migration level, this product was tested with 3% acetic acid for 10 days at 60°C, with 50% ethanol for 10 days at 60°C, and with olive oil for 10 days at 60°C. This product complies with the overall migration limit (OML) and specific migration limits (SML).

This product does not contain any dual-use additive per Regulation (EC) No 1333/2008 and its Amendments.

This product meets the requirements of Framework Regulation (EC) No 1935/2004 on materials and articles intended to come into contact with food.

Product Regulatory Overview (PRO)
Marlex® HHM 5502BN High Density Polyethylene

This product is produced in accordance with good manufacturing practice (GMP) as outlined in EU GMP Regulation (EC) No 2023/2006.

Swiss Food Contact

The monomer(s) and the additive(s) of this resin are listed in SR 817.023.21 Regulation on materials and articles intended to come into contact with food Annex 2.

This product was tested for the overall and specific migration compliance per Commission Regulation (EU) No 10/2011. The tested sample thickness was 3.175 mm (125 mils). The surface-to-volume ratio was 1 dm^2 sample immersed in 1dl simulant. For measuring the overall migration level, this product was tested with 3% acetic acid for 10 days at 40°C, with 50% ethanol for 10 days at 40°C, and with olive oil for 10 days at 40°C. For measuring the specific migration level, this product was tested with 3% acetic acid for 10 days at 60°C, with 50% ethanol for 10 days at 60°C, and with olive oil for 10 days at 60°C. This product complies with the overall migration limit (OML) and specific migration limits (SML).

This product does not contain any food additive per SR 817.023.31.

Germany BfR Recommendations

This product meets the requirements on catalyst residues and residual decomposition products in German BfR Recommendations on Food Contact Materials III Polyethylene.

U.S. FDA Food Contact

This product meets the requirements for polyolefin resins intended for food packaging applications as described in the FDA olefin polymer regulations 21 CFR 177.1520(c) 3.2a. The resin may be used in contact with all types of food as defined in Table 1, 21 CFR 176.170(c) and at use conditions B-H as defined in Table 2, 21 CFR 176.170(c).

This product is produced in accordance with good manufacturing practices (GMP) as outlined in 21 CFR 174.5.

Canada Food Contact

A "Letter of No Objection" for this product has been approved by Health Canada. This product may be used as a food-contact article such as bottle, food pail, cap, and casing under and at the temperature of 212 °F (100 °C). KS07061804

Brazil Food Contact

The monomer(s) and the additive(s) of this product are listed in Brazilian Legislation ANVISA Resolution No. 105 (May19th, 1999) Annex II and Annex III.
For full compliance, a total migration limit applies to the final article intended to come into contact with food. This product has not been tested for the purpose of complying with Brazilian food contact regulations.

China Food Contact

Product Regulatory Overview (PRO)
Marlex® HHM 5502BN High Density Polyethylene

This polyethylene resin is an ethylene and hexene copolymer, and is listed on GB 4806.6-2016 "Standard on food-contact use plastic resin" Appendix A Table A.1, as No 101, CAS 25213-02-9. The monomer 1-hexene has SML 3 mg/kg.

The additive(s) of this resin are all listed on GB 9685-2016 "Standard on the uses of additives in food contact materials and articles", and meet the corresponding allowed maximum use levels.

A representative grade of this product family was tested and calculated for specific migration compliance per GB 4806.6-2016 and GB 9685-2016. The tested sample thickness was 3.175 mm (125 mils). The surface-to-volume ratio was 1 dm^2 sample to 100 ml simulant.

For measuring the specific migration level, this product was tested with olive oil for 10 days at 60°C. This product met the specific migration limit (SML). With food simulants of 4% acetic acid for 10 days at 60°C and 10% ethanol for 10 days at 60°C, the specific migration levels would be expected to be lower than the level measured in olive oil for 10 days at 60°C

This resin meets the requirements of GB 4806.6-2016.

This resin meets the requirements of GB 4806.1-2016 General safety requirements for food contact materials and articles.

This resin is produced in accordance with good manufacturing practice (GMP) as outlined in GB 31603-2015 General hygiene standard on manufacturing food contact materials and articles.

U.S. Pharmacopeia (USP)

This product meets the standards set by the United States Pharmacopoeia USP 39 <87> Biological Reactivity Tests, in Vitro.
This product meets the standards set by the United States Pharmacopoeia USP 26 <88> Biological Reactivity Tests, in Vivo - Class VI-70ºC Plastic.
This product meets the standards set by the United States Pharmacopoeia USP 39 <661.1> Plastic Materials of Construction – *Identification, Physicochemical, Extractable Metals, and Plastic Additives tests.*

European Pharmacopoeia (EUP)

This product meets the requirements of European Pharmacopoeia 3.1.3. the 9.4th edition "Polyolefins" materials used for the manufacture of containers.
This product meets the requirements of European Pharmacopoeia 3.1.5 the 9.4th edition "Polyethylene with Additives for Containers for Parenteral Preparations and for Ophthalmic Preparations."

Drug Master File (DMF)

This product is listed in U.S. FDA Type III Drug Master File 1016.
This product is listed in Health Canada Drug Master File 9389.

Regulation 1223/2009 of 2009-11-30 on Cosmetic Products

Product Regulatory Overview (PRO)
Marlex® HHM 5502BN High Density Polyethylene

Regulation 1223/2009 is not applicable to this product. This product is not defined in the regulation as a cosmetic product, and it does not contain any substances listed as prohibited in cosmetic products.

EU Classification and Labeling

This product is not a dangerous substance according to Regulation (EC) No 1272/2008 on classification, labelling and packaging of substances and mixtures.

Animal-Derived Materials / Kosher / Halal

No animal-derived materials are used in the manufacture or formulation of this product. This product can be considered free from bovine spongiform encephalopathy (BSE) and other transmissible spongiform encephalopathies (TSE). Chevron Phillips Chemical Company has not made any efforts to certify its Polyethylene resins as Kosher/Halal or in compliance with Kosher/Halal guidelines.

California's Safe Drinking Water and Toxic Enforcement Act of 1986 (Proposition 65)

This product, as shipped, does not contain any carcinogens or reproductive toxins presently known by the State of California to cause cancer or reproductive toxicity at a level of exposure subject to the requirements of California Proposition 65.

Consumer Product Safety Improvement Act of 2008 (H.R. 4040)

This product does not contain lead and phthalates. It therefore complies with the relevant sections of the Consumer Product Safety Improvement Act of 2008 (H.R. 4040).

Clean Air

This product does not contain any ozone depleting substances, including those listed in Regulation (EC) No 1005/2009.

This product does not contain any of the following substances regulated by the Clean Air Act:

- Class I or Class II Ozone-Depleting Substances (CAA Section 602)
- Hazardous Air Pollutants (CAA Section 112)
- Accidental Release Prevention Substances (CAA Section 112(r))
- Volatile Organic Chemicals (CAA Section 111)

Heavy metals, RoHS, WEEE, Waste packaging, CONEG

No heavy metals (i.e., antimony, arsenic, barium, cadmium, chromium, lead, mercury, selenium, or silver) are purposely added to this product in quantities that would violate governmental guidelines. The summation of lead, cadmium, mercury, and hexavalent chromium in this product is less than 20 ppm. No polybrominated biphenyls (PBB), polybrominated diphenyl ethers (PBDE), Deca Brominated Diphenyl Ethers (Deca BDE), or phthalates are intentionally added to this product. This product therefore meets the relevant requirements of the following Directives or Regulations:

- 2015/863/EU, 2011/65/EU and 2002/95/EC (RoHS)
- 2002/96/EC and 2012/19/EU (WEEE)
- 2000/53/EC (ELV)

- 94/62/EC, 2005/20/EC, and 2013/2/EU (Packaging Waste Directive)
- USA CONEG Regulation / Model Toxics in Packaging Legislation
- California Toxics in Packaging Prevention Act

Toys

This product complies with the requirements of ASTM F963, EN 71-3, EN71-9, EU Directives 2005/84/EC and 2009/48EC.

Phthalates

No phthalates, including di-(2-ethylhexyl) phthalate (DEHP), dibutyl phthalate (DBP), benzyl butyl phthalate (BBP), diisononyl phthalate (DINP), diisodecyl phthalate (DIDP), di-n-octyl phthalate (DNOP), diisobutyl phthalate (DIBP), dimethyl phthalate (DMP), and diethyl phthalate (DEP) are intentionally added to this product. This product therefore meets the requirements of the Consumer Product Safety Improvement Act of 2008 and EU Directive 2005/84/EC.

European Chemicals Agency (ECHA) Substances of Concern

This product does not contain any Substances of Very High Concern (SVHC) as listed on the candidate list published by ECHA as of 15 January 2019. This product does not contain substances restricted under REACH Annex XVII (Restricted Substances List) or subject to authorization under REACH Annex XIV (Authorization List).

Canadian Environmental Protection Act (CEPA) "Challenge" Substances

This product does not contain any high priority chemical substances listed on the "Challenge" Substance Batches as issued by CEPA.

Nanomaterial

This product is not a nanomaterial.

Conflict Minerals

Neither tantalum, tin, gold, and tungsten, nor the minerals associated with these metals (Columbite-Tantalite, Cassiterite, Gold, or Wolframite) are intentionally added to this product. These substances are not necessary to the production of this product.

Absence of Substances and Chemicals

None of the following substances are used as additives or raw materials in the manufacture of this product:

- Abietic acid
- Acrylamide
- Acrylonitrile or acrylonitrile co-polymers
- Alkylphenols
- Alkylphenol Ethoxylates, including nonylphenol ethoxylate and octylphenol ethoxylate
- Allergens, including but not limited to those listed in EU Regulation 1169/2011, Directives 2000/13/EC, 2003/89/EC, and Section B.01.010.1 (1) of Canadian Regulation C.R.C., c. 870 such as: peanuts, tree nuts, milk, eggs, wheat gluten, soybeans, fish and shellfish

Product Regulatory Overview (PRO)
Marlex® HHM 5502BN High Density Polyethylene

- Aromatic amines
- Asbestos
- Azo compounds
- 2,2-Bis(4-hydroxyphenyl)propane bis(2,3-epoxypropyl) ether (BADGE), Bis (hydroxyphenyl)methane bis(2,3-epoxypropyl) ether (BFDGE), and/or Novolac glycidyl ethers (NOGE)
- Biocides
- Bisphenol compounds, including but not limited to: BPA, BPB, BPC, BPE, BPF, BPH, BPS, and BPZ
- Brominated or halogenated flame retardants
- Butylated Hydroxytoluene (BHT), Butylated Hydroxyanisole (BHA), and Tertiary butylhydroquinone (TBHQ)
- Chlorofluorocarbons (CFC), hydrochlorofluorocarbons (HCFC), hydrofluorocarbons (HFC)
- Chlorinated paraffins, Chlorinated hydrocarbons
- Colorants or pigments
- Cyanuric acid
- Di(ethylhexyl) adipate (DEHA), diethyl hydroxyl amine (DEHA), or di(ethylhexyl)maleate (DEHM)
- Dimethylfumarate (DMF)
- Dioxins or furans
- Endocrine disruptors
- Epoxy derivatives listed in EU Directives 2002/16/EC and 1895/2005
- Epoxidised Soybean Oil
- Formaldehyde
- Fungicides or fumigants
- Genetically-modified organisms (GMO)
- Halogens
- Melamine
- Methyl bromide
- Mineral Oil Saturated Hydrocarbons (MOSH) or Mineral Oil Aromatic Hydrocarbons (MOAH)
- Natural rubber latex, dry natural rubber, or synthetic latex
- Nonyl phenol (NP)
- Organotin compounds
- Ozone-depleting chemicals
- Parabens
- Poly- and perfluoroalkyl substances (PFAS), as perfluoroctanoic acid (PFOA) and perfluoroctane sulfonate (PFOS)
- Pesticides and fungicides
- Photoinitiators, including: benzophenone, hydroxybenzophenone, and 4-methylbenzophenone, and Isopropylthioxanthone (ITX)
- Plasticizers
- Polycyclic aromatic hydrocarbons (PAH), also called polyaromatic hydrocarbons
- Polybrominated Diphenyl Ethers (PBDEs) included: decaBDE, octaBDE, and pentaBDE

Product Regulatory Overview (PRO)
Marlex® HHM 5502BN High Density Polyethylene

- Polycarbonates
- Polychlorinated and Polybrominated Biphenyls (PCBs and PBBs)
- Polychlorinated and Polybrominated Terphenyls (PCTs and PBTs)
- Polydimethylsiloxane (PDMS)
- Radioactive Substances
- Recycled materials
- Silicone
- Sulfonamides
- Triclosan (2,4,4'-trichloro-2'-hydroxydiphenylether), Triclocarban
- Tris-Nonylphenol Phosphite (TNPP)
- Vinyl Chloride Monomer (VCM) and Polyvinyl Chloride (PVC) or copolymers

It is the responsibility of the customer to check compliance of the final articles with the relevant legislative and applicable regulatory requirements including their restrictions.

Disclaimer: *Before using this product, the user is advised and cautioned to make its own determination and assessment of the safety and suitability of the product for the specific use in question and is further advised against relying on the information contained herein as it may relate to any specific use or application. It is the ultimate responsibility of the user to ensure that the product is suited and the information is applicable to the user's specific application. Chevron Phillips Chemical Company LP and Saudi Polymers Company (SPCo), do not make, and expressly disclaim, all warranties, including warranties of merchantability or fitness for a particular purpose, regardless of whether oral or written, express or implied, or allegedly arising from any usage of any trade or from any course of dealing in connection with the use of the information contained herein or the product itself. The user expressly assumes all risk and liability, whether based in contract, tort or otherwise, in connection with the use of the information contained herein or the product itself. Further, information contained herein is given without reference to any intellectual property issues, as well as federal, state or local laws which may be encountered in the use thereof. Such questions should be investigated by the user.*

Additional information on the health and safety aspects of our product is listed in the SDS of the product.

Address: Chevron Phillips Chemical Company LP, 10001 Six Pines Drive, The Woodlands, TX 77380
Website: http://www.cpchem.com/en-us/ehs/pages/productregulatoryoverviews.aspx

Saudi Polymers Company, P.O. Box 11221, Jubail Industrial City, Saudi Arabia 31961

White masterbatch

lyondellbasell

Food contact declaration

Company

A. Schulman Plastics BVBA
Pedro Colomalaan 25
B-2880 Bornem - Belgium
T +32-3-890 42 11
ASI-productsafety.emea@lyondellbasell.com

General info

PRODUCT	**POLYWHITE B 8750 A WHITE ASBAG 25**
PRODUCT CODE	11602903
VERSION	3.32
VALID TO	This document is valid until the next relevant legislative, regulatory and /or compositional change.
CONCLUSION EU	Based on the info received from our suppliers of the raw materials, we confirm that the composition complies with the EU legislation as mentioned below for the different component types. It is up to the producer of the finished article to verify that migration limitation is not exceeded.

European Union

1935/2004/EC	This product complies with the relevant requirements of Regulation (EC) No 1935/2004 (Framework Regulation) as applicable to intermediate materials. Migration studies on samples of TiO2 with Alumina treatment were tested by one of our suppliers with 8% and 95% Ethanol as simulant. The typical protocol of boiling for two hours, followed by incubation for 10 days was used. The simulant samples were tested for aluminum and the element was not detected with a detection limit of 1ug/mL.
2023/2006/EC	This product complies with the relevant requirements of Good Manufacturing Practice (EC) No 2023/2006 (including all amendments) applicable to intermediate materials.
EU 10/2011	All the polymers and intentionally added additives comply with the requirements of Regulation (EU) No 10/2011 and its amendments, applicable to intermediate materials; published before the print date of this document. Information regarding components subject to further specific limitations and concerning the presence of dual-use additives is given hereunder.
Migration Limits	Ref No Annex II - Aluminium - 1 mg/kg SML Ref No Annex II - Zinc - 5 mg/kg SML FCM No 433 - Ref No 68320 - 6 mg/kg SML FCM No 923 - Ref No 39150 - 5 mg/kg SML; The residual amount of diethanolamine in plastics, as an impurity and decomposition product of the substance, should not result in a migration of diethanolamine higher than 0.3 mg/kg food. There is a risk that the SML could be exceeded from low-density polyethylene (LDPE).
Dual use additives	FCM No 504 - Ref No 86240 - E551 FCM No 610 - Ref No 93440 - E171 FCM No 9 - Ref No 30610 - E470a
AP(89)1	All pigments comply with resolution AP(89)1
French Positive List	All pigments are listed on the French positive list, Brochure No 1227 and meet its purity requirements.
Concentration value	Ref No Annex II - Aluminium - 0,417% Ref No Annex II - Zinc - 0,052% FCM No 433 - Ref No 68320 - 0,000362% FCM No 923 - Ref No 39150 - 4,56%

FCM No 504 - Ref No 86240 - E551 - 0,15%
FCM No 610 - Ref No 93440 - E171 - 48,75%
FCM No 9 - Ref No 30610 - E470a - Not intentionally added.

Responsibility

Appropriate overall and specific migration tests on the final material or article will determine the regulatory suitability for contact with different food types and various end-use conditions.However these are beyond the control of LyondellBasell and are a part of the responsibility of the user of this product.

Statement managed by LyondellBasell – Product Safety Department Date :13/01/2020

This document is created electronically and is valid without signature. Original text: English

lyondellbasell

PRODUCT REGULATORY INFORMATION SHEET

POLYWHITE B 8750 A WHI, [104W2]

We certify, that during manufacturing of this product, we do not use or intentionally incorporate into it, any of the chemicals as restricted by the following regulations and their subsequent amendments in amounts which exceed the applicable limits.

- Directive 2011/65/EC (Restriction of the use of certain Hazardous Substances in electrical and electronic equipment - RoHS)
  - Cr(VI), Hg, Pb, PBB and PBDE < 0.1 wt%, Cd < 0.01 wt%
- Directive 2012/19/EC (Waste Electrical & Electronic Equipment - WEEE) - Annex II
  - No ingredients used which require selective waste treatment
  (As, Hg, PCB, PCT, CFC, HCFC, HFC, brominated FR)
- Directive 2000/53/EC (End of life vehicles - ELV)
  - Cr(VI), Hg and Pb < 0.1 wt%, Cd < 0.01 wt%)
- Directive 94/62/EC (Packaging and packaging waste) and US CONEG "Toxics in Packaging" Regulation, as amended
  - Sum of Cd, Cr, Hg and Pb < 100 ppm

Regarding classification of the above product according to REGULATION (EC) No 1272/2008 and its subsequent amendments, reference is made in the SDS for the above product.

We also certify that during the manufacturing of the above product we do not use or intentionally incorporate into it any of the following materials:

- Candidate list of substances of very high concern in accordance with Article 59(10) of the REACH regulation as published by ECHA on June 25, 2020.
- Dimethyl fumarate – Cas 624-49-7 In relation to Commission Decision (EC) 2009/251
- Organotin compounds (TBT, DBT, MBT)
- Bisphenol A (CAS No 80-05-7) / Bisphenol F / Bisphenol S / Bisphenol B
- Other epoxy derivatives, BADGE, BFDGE or NOGE
- Latex / natural rubber
- PVC and PVC compounds, Vinyl Chloride, PVDC (Polyvinylidene chloride)

lyondellbasell

- SUBSTANCES OF ANIMAL ORIGIN
  Be aware that a pigment used in the above batch may contain traces of substances of animal origin. The materials of animal origin in these carriers are conform to the requirements regarding origin and specified risk materials as defined in Regulation 1069/2009, or originate from countries considered as BSE-free.

- Engineered nanomaterials
  Of course, it is well known that many powders (dyestuffs, pigments and additives) used in the production of masterbatches /compounds include particles in the nano range. The lowest part of the particle size distribution of those powders can be in the nano range. Those powders are not marketed as nanomaterials, nor are they necessarily specifically engineered or manufactured to be in the <100nm range. In polymer applications these powders are encapsulated in the polymer matrix.

- Recyclates/Recycled materials according to Commission regulation (EU) 282/2008/EC of 27 March 2008 and amended up to (EU) 2015/1906 of 22 October 2015 on recycled plastic materials and articles intended to come into contact with foods.

- Perfluorooctanoic acids (PFOA)

Substance	CAS No,
Ammonium pentadecafluorooctanoate	3825-26-1
Pentadecafluorooctanoic acid	335-67-1
Ethylperfluorooctanoate	3108-24-5
Methylperfluorooctanoate	376-27-2
Pentadecafluorooctyl fluoride	335-66-0
Sodium pentadecafluorooctanoate	335-95-5

- Perfluorooctanoic sulfonates (PFOS)

Substance	CAS No,
Heptadecafluorooctane-1-sulphonic acid	1763-23-1
Potassium heptadecafluorooctane-1-sulphonate	2795-39-3
Ammonium heptadecafluorooctanesulphonate	29081-56-9
Lithium heptadecafluorooctanesulphonate	29457-72-5
Tetraethylammonium heptadecafluorooctanesulphonate	56773-42-3
Heptadecafluorooctanesulphonyl fluoride	307-35-7

- Azodyes classified according our suppliers that may form carcinogenic amines

Substance	CAS No,
C.I. Acid Red 5, C.I.14905	5858-63-9
C.I. Basic Red 111	118658-98-3
C.I. Direct Black 38, C.I.30235	1937-37-7
C.I. Direct Blue 1, C.I.24410	2610-05-1
C.I. Direct Blue 2, C.I.22590	2429-73-4
C.I. Direct Blue 3, C.I.23705	2429-72-3
C.I. Direct Blue 6, C.I.22610	2602-46-2
C.I. Direct Blue 14, C.I.23850	72-57-1
C.I. Direct Blue 295, C.I.23820	6420-22-0
C.I. Direct Brown 2, C.I.22311	2429-82-5
C.I. Direct Brown 6, C.I.30140	2893-80-3
C.I. Direct Brown 31, C.I.35660	2429-81-4
C.I. Direct Red 1, C.I.22310	2429-84-7
C.I. Direct Red 2, C.I.23500	992-59-6
C.I. Direct Red 10, C.I.22145	2429-70-1
C.I. Direct Red 28, C.I.22120	573-58-0
C.I. Direct Red 37, C.I.22240	3530-19-6
C.I. Direct Red 39, C.I.23630	6358-29-8
C.I. Disperse Yellow 7, C.I.26090	6300-37-4
Trisodium bis(6-(4-anisidino)-3-sulfonato-2-(3,5-dinitro-2-oxidophenylazo)-1-naphtholato)chromate(1-)	118685-33-9

- Phthalates

Substance	CAS No,
Di-n-butyl phthalate	CAS 84-74-2
Di-isobutyl phthalate	CAS 84-69-5
Di-n-pentyl phthalate	CAS 131-18-0
Butyl benzyl phthalate	CAS 85-68-7
Di-n-hexyl phthalate	CAS 84-75-3
Di(2-ethylhexyl) phthalate	CAS 117-81-7
Diisopentylphthalate	CAS 605-50-5
Bis(2-methoxyethyl) phthalate	CAS 117-82-8
1,2-benzenedicarboxylic acid, mixed decyl and hexyl and octyl diesters with ≥ 0.3% of dihexyl phthalate	CAS 68648-93-1

1,2-benzenedicarboxylic acid, di-C6-10-alkyl esters	CAS 68515-51-5
1,2-Benzenedicarboxylic acid; di-C6-8-branched alkylesters, C7-rich	CAS 71888-89-6
Heptyl undecyl phthalate	CAS 68515-42-4

- Allergens as listed in Annex II of Regulation (EU) No 1169/2011 on the provision of food information to consumers

Allergen	Product contains this allergen (YES/NO)	Product is produced on same equipment or in same facility where these allergens are used/present (YES/NO)
Cereals containing gluten (i.e. wheat, Corn, rye, barley, oats, spelt, kamut or their hybridised strains) and products thereof	NO	NO
Crustaceans and products thereof	NO	NO
Eggs and products thereof	NO	NO
Fish and products thereof	NO	NO
Peanuts and products thereof	NO	NO
Soybeans and products thereof	NO	NO
Milk and products thereof (including lactose)	NO	NO
Nuts *(see below) and products thereof	NO	NO
Celery and products thereof	NO	NO
Mustard and products thereof	NO	NO
Sesame seeds and products thereof	NO	NO
Sulphur dioxide and sulphites (concentrations of more than 10 mg/kg or 10 mg/litre, as SO2)	NO	NO
Lupines and products thereof	NO	NO
Moluscs and products thereof	NO	NO

* Almond (*Amygdalus communis L.*), Hazelnut (*Corylus avellana*), Walnut (*Juglans regia*), Cashew (*Anacardium occidentale*), Pecan nut (*Carya illinoiesis* (Wangenh.) K. Koch), Brazil nut (*Bertholletia excelsa*), Pistachio nut (*Pistacia vera*), Macadamia nut and Queensland nut (*Macadamia ternifolia*).

- Genitically modified organisms (GMO)
  However, our suppliers also use some substances derived from organisms as starting materials for synthesis or components of mixtures (e. g. fatty acid derived alcohols or enzymes).

Due to the complexity of the channels of trade, it cannot be excluded that some of these raw materials may originate from, but do not themselves contain, genetically modified organisms (GMO's).
Such raw materials pass through a range of chemical transformation processes and purification steps and are, therefore, considered to be safe.

Ref.:
DIRECTIVE 2001/18/EC OF THE EUROPEAN PARLIAMENT AND OF THE COUNCIL of 12 March 2001 on the deliberate release into the environment of genetically modified organisms and repealing Council Directive 90/220/EEC

- Persistent Organic Pollutants set out in the Stockholm Convention and Commission (EU) 2020/1204 of 9 June 2020 amending Annex I to Regulation (EU) 2019/1021.

Substance	CAS No,
Tetrabromodiphenyl ether C12H6Br4O	40088-47-9 and others
Pentabromodiphenyl ether C12H5Br5O	32534-81-9 and others
Hexabromodiphenyl ether C12H4Br6O	36483-60-0 and others
Heptabromodiphenyl ether C12H3Br7O	68928-80-3 and others
Bis(pentabromophenyl) ether (decabromodiphenyl ether; decaBDE)	1163-19-5
Perfluorooctane sulfonic acid and its derivatives (PFOS) C8F17SO2X (X = OH, Metal salt (O-M+), halide, amide, and other derivatives including polymers)	1763-23-1 2795-39-3 29457-72-5 29081-56-9 70225-14-8 56773-42-3 251099-16-8 4151-50-2 31506-32-8 1691-99-2 24448-09-7 307-35-7 and others
DDT (1,1,1-trichloro-2,2-bis (4-chlorophenyl)ethane)	50-29-3
Hexachlorocyclohexanes, including lindane	58-89-9, 319-84-6, 319-85-7, 608-73-1
Dieldrin	60-57-1
Endrin	72-20-8
Heptachlor	76-44-8

Endosulfan	115-29-7, 959-98-8, 33213-65-9
Hexachlorobenzene	118-74-1
Chlordecone	143-50-0
Aldrin	309-00-2
Pentachlorobenzene	608-93-5
Polychlorinated Biphenyls (PCB)	1336-36-3 and others
Mirex	2385-85-5
Toxaphene	8001-35-2
Hexabromobiphenyl	36355-01-8
Hexabromocyclododecane'	25637-99-4, 3194-55-6, 134237-50-6, 134237-51-7, 134237-52-8
Hexachlorobutadiene	87-68-3
Pentachlorophenol and its salts and esters	87-86-5 and others
Polychlorinated naphthalenes	70776-03-3 and others
Alkanes C10-C13, chloro (short-chain chlorinated paraffins) (SCCPs)	85535-84-8 and others
'Perfluorooctanoic acid (PFOA), its salts and PFOA-related compounds	335-67-1 and others
Dicofol	115-32-2

- Ozone depleting substances according Reg. (EC) No 1005/2009; Montreal Protocol; US EPA Class 1 ODS

Substance	CAS No,
1,1,1,2-Tetrachlor-2,2-difluoroethane	76-11-9
1,1,1,3,3,3-Hexachlor-2,2-difluoropropane	3182-26-1
1,1,1,3,3-Pentachlor-2,2,3-trifluoropropane	2354-06-5
1,1,1,3-Tetrachlorotetrafluoropropane	2268-46-4
1,1,1-Tribromo-2,2,2-trifluoroethane	354-48-3
1,1,1-Trichloropentafluoropropane	4259-43-2
1,1,2-trichloro-1,2,2-trifluoroethane	76-13-1
1,1-Dibromo-1,2,2,2-tetrafluoroethane	27336-23-8
1,1-Dibromo-2,2-difluoroethylene	430-85-3
1,1-Dichlor-1,2,2,2-tetrafluoroethane	374-07-2
1,2,2-Trichloropentafluoropropane	1599-41-3
1,2,3-Trichloropentafluoropropane	76-17-5
1,2-Dibromo-1,1,2-trichloroethane	13749-38-7
1,2-Dibromo-1-chloro-1,2,2-trifluoroethane	354-51-8
1,2-Dibromotetrachloroethane	630-25-1

1,2-Dichloro-1,1,2,3,3,3-hexafluoropropane	661-97-2
1,2-Dichloro-1,1,3,3,3-pentafluoropropane	127564-92-5
1,2-Difluorotetrachloroethane	76-12-0
1-Bromo-1-chloro-2,2-difluoroethylene	758-24-7
2-Bromo-1,1-dichloroethylene	5870-61-1
Bromochlorodifluoromethane	353-59-3
Bromodichlorofluoromethane	353-58-2
Bromofluoromethane	373-52-4
Bromopentafluoroethane	354-55-2
Bromotrifluoroethylene	598-73-2
Bromotrifluoromethane	75-63-8
Carbon tetrabromide	558-13-4
Carbon tetrachloride	56-23-5
Chlorobromomethane	74-97-5
Chlorobromotrifluoroethane	74925-63-6
Chlorodibromomethane	124-48-1
chlorotrifluoroethylene	79-38-9
Chlorotrifluoromethane	75-72-9
Cryofluorane	76-14-2
Decafluorobutane	355-25-9
Dibromodichloromethane	594-18-3
Dibromodifluoromethane	75-61-6
Dibromotetrafluoroethane	25497-30-7
Dibromotetrafluoroethane (Halon 2402)	124-73-2
Dichlorodifluoromethane	75-71-8
dichlorotetrafluoroethane	1320-37-2
Ethane, 1-bromo-2-chloro-1,1,2-trifluoro-	354-06-3
Ethane, 2-bromo-1-chloro-1,1,2-trifluoro-	354-20-1
Ethane, 2-bromo-2-chloro-1,1,1-trifluoro-, (R)-	51230-17-2
Ethane, 2-bromo-2-chloro-1,1,1-trifluoro-, (S)-	51230-18-3
Ethane, tribromo-	598-16-3
Ethene, tetrabromo-	79-28-7
Heptachlorofluoropropane	135401-87-5
Heptachlorofluoropropane	422-78-6
Heptafluoropropyl chloride	422-86-6

Hexachlorodifluoropropane	134452-44-1
Hexachloroethane	67-72-1
Methane, bromotrichloro-	75-62-7
Methane, tribromofluoro-	353-54-8
Methyl bromide (Bromomethane)	74-83-9
Monochloropentafluoroethane	76-15-3
Octafluoropropane	76-19-7
Pentabromoethane	75-95-6
Pentachlorofluoroethane	354-56-3
Pentachlorotrifluoropropane	134237-31-3
Perfluoroethane	76-16-4
Tetrachlorotetrafluoropropane	29255-31-0
Tribromochloromethane	594-15-0
Trichlorofluoromethane	75-69-4
Trichlorotrifluoroethane	26523-64-8
Trichlorotrifluoroethane	354-58-5

The absence of above substances has not been verified by analysis or tests by LyondellBasell and is declared based on the information available to us from our raw material suppliers. The info we receive from our suppliers is info which they are legally obliged to share with their downstream users.

It can therefore not be excluded that trace levels of these substances may be unintentionally present (amongst others because they may be ubiquitous in the environment) or may result from the specific characteristics of the raw materials or the manufacturing process. It is the responsibility of the recipient of our products to ensure that any local applicable rules and legislation are observed.

Statement managed by LyondellBasell – Product Safety Department

Issue date: December 30, 2020

Quality Document summary

Standard	Registration No./Certificate ref	Date of first issue
ISO 9001	QAIC/UK/1807-A	30 Oct 2012
ISO 15378	QAIC/UK/1807-C	22 Oct 2015
ISO 14001	QAIC/UK/1807-B	03 May 2013
BRC (Storage and Distribution)	QAIC/UK/BRC/391	06 May 2013

Current Certificates available on request.

Version	Date	Update
1.0	14 Jan 2020	First Issue
2.0	07 Feb 2020	Update to pack configuration information
3.0	27 Jul 2020	Addition of tolerances to technical drawings
4.0	28 Sep 2020	Update to 250ml Jar technical drawing
5.0	29 Nov 2021	Update to masterbatch regulatory information, 125ml technical drawing and weight tolerances.